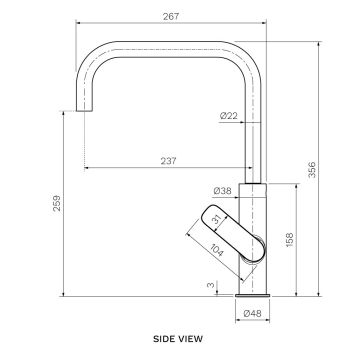


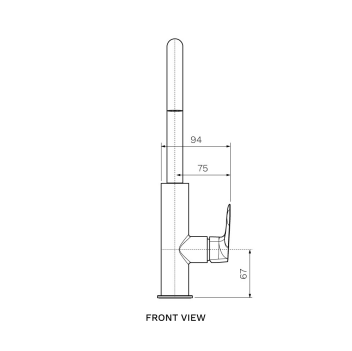


# Slim II Kitchen Mixer with Square Spout

S2.07-1HS, S2.07-1HS.02, S2.07-1HS.41, S2.07-1HS.46, S2.07-1HS.48, S2.07-1HS.50

This sleek mixer range fits perfectly throughout the home or commercial environment. A timeless design, featuring a beautifully curved handle which fits ergonomically in hand delivering outstanding user experience, reliability and aesthetic appeal. Brushed Nickel, Brushed Brass, Matt Bronze and Fucile finishes are PVD. Chrome and Matt Black finishes are Electroplate.

| | |
|---|---|
| **Product type** | Kitchen Tapware |
| **Brand** | Parisi |
| **Collection** | Slim II |
| **Range** | Design |
| **Designers** | Parisi Design Team |
| **WxDxH** | 94mm x 267mm x 356mm |
| **Colour / Finish** | Chrome, Matt Black, Brushed Nickel, Brushed Brass, Matt Bronze, Fucile |
| **Material** | Brass I PVD I Electroplate |
| **WELS** | 6 Star |
| **Nominal Flow Rate (L/m)** | 4.5 L/min |

| | |
|---|---|
| **Warranty** | 15 Year Warranty |
| **Availability** | Stocked Item |
| **Features:** | 237mm Reach. Concealed aerator |



Note: Dimensions are in millimetres and nominal. They can vary according to material and manufacturing tolerances. Exact dimensions should be determined by measuring actual product. PARISI reserves the right to vary specifications without notice.