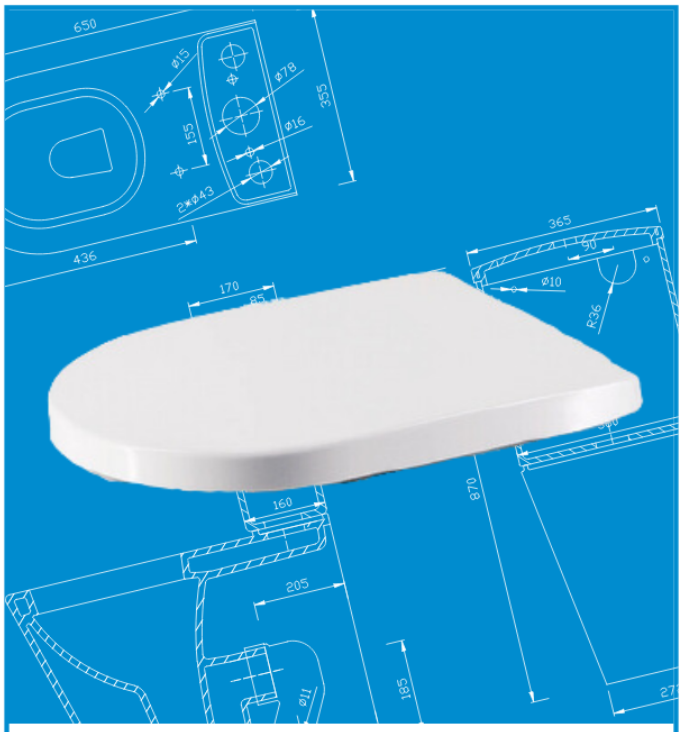

BASSINI

STANDARD TOILET SEAT

PRODUCT CODE: **HARMONY10215**

FEATURES

- ABS Plastic material
- Soft Close hinge system
- 145-155mm hinge variance
- Standard D-Shape
- White
- One button quick release
- Stainless Steel Hinges
- 1 Year Warranty

harmonybathroomware.com.au

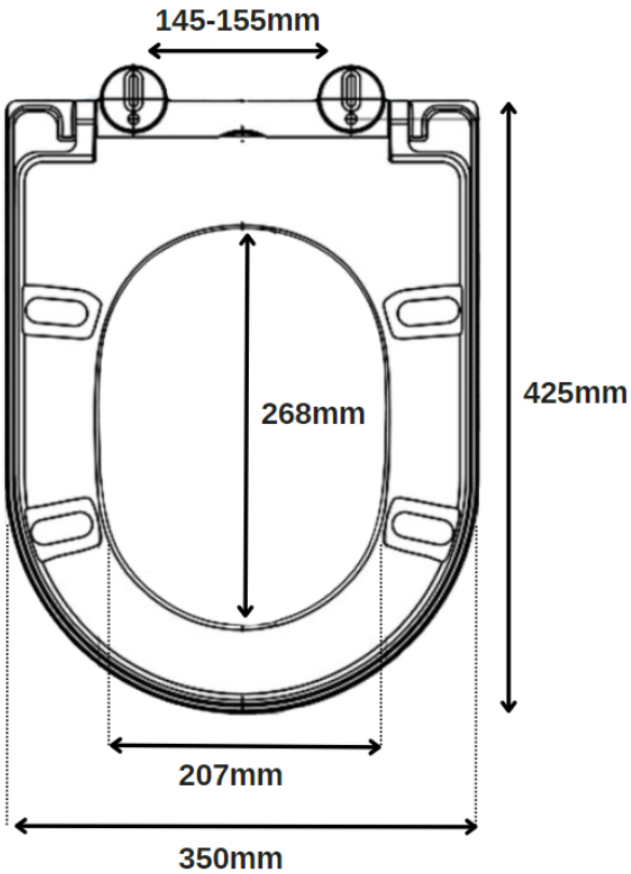

WaterMark

AS 1172.1 - AS 1172.2
Certificate No. 23263

VERSION DATE: 2023/04

DISCLAIMER: The installation of this toilet suite should be undertaken by a qualified and licensed plumber and in accordance with the National Plumbing Code AS/NZS 3500.2.2. Harmony sanitaryware products are designed to meet the appropriate Australian standards. Dimensions and set-outs contained are correct at the time of publication. However, neither the manufacturer nor the distributor takes responsibility for printing errors. The manufacturer and the distributor reserve the right to vary specifications or delete toilet suite models without prior notification. A failure to follow the installation instructions, or a failure to have the product installed by a licensed tradesperson, may void the product's warranty.