PRODUCT SPECIFICATION

30355

BREMONT HAND SHOWER ON ADJUSTABLE HOOK, 90RND

FEATURES

Available for order now

Supply starts from Nov 2025

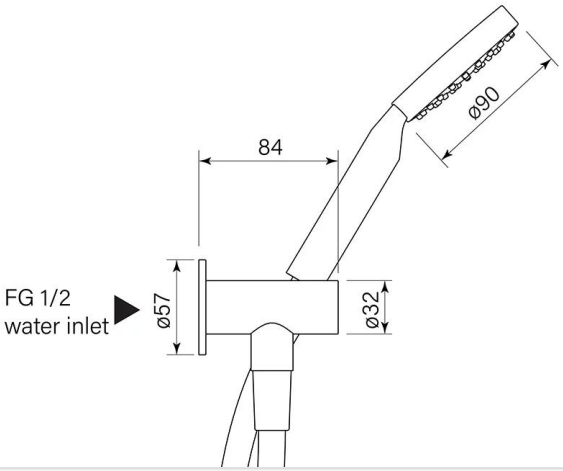

Faucet Australia Pty Ltd ACN 132 249 702
faucetstrommen.com.au
31 Tate Drive Kerang VIC 3579
Phone: +61 3 5450 4236

Designs and specifications are subject to change without notice E&OE