ALLPROOF INDUSTRIES

DESCRIPTION	
CODE	FINISH
V800E	STAINLESS STEEL

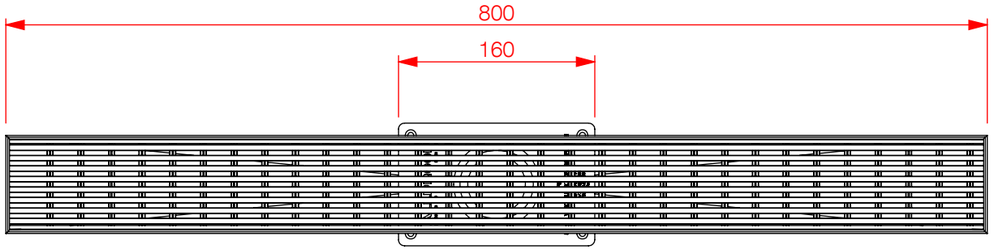

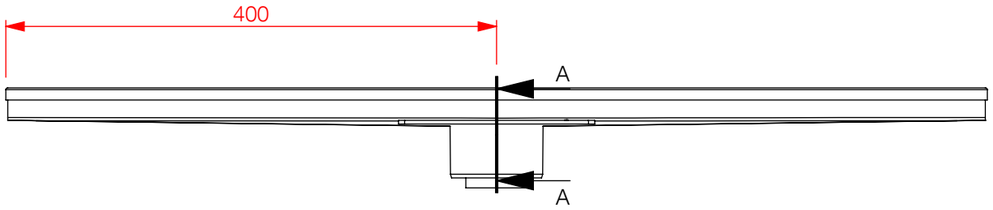

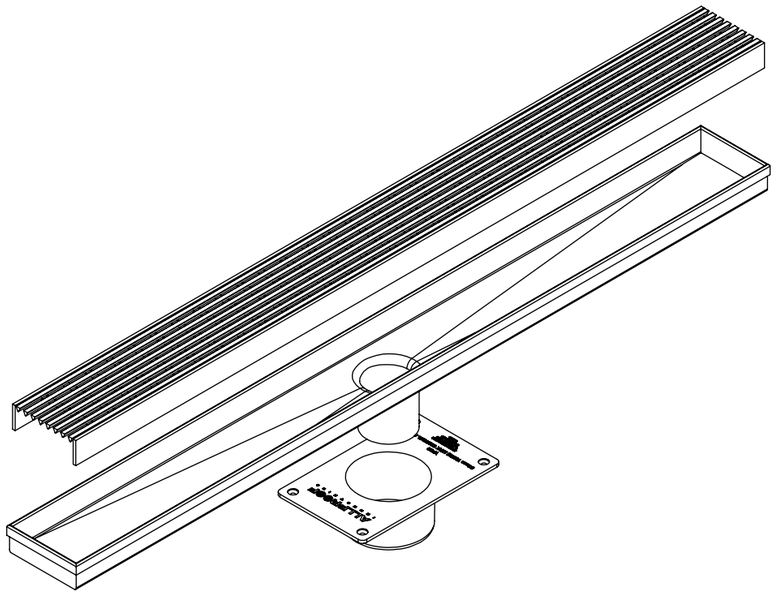

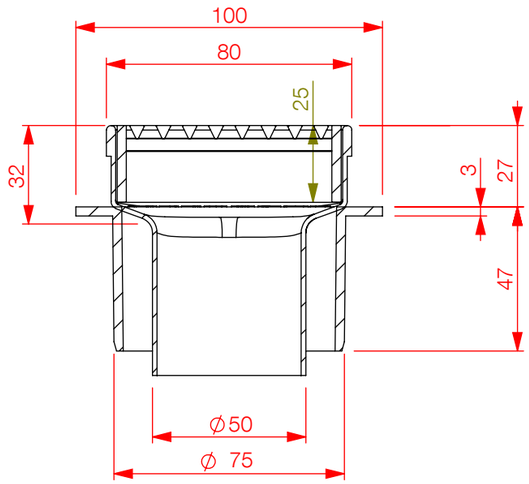

SECTION A-A
SCALE 1 : 2

REVISION	CHANGE	DESCRIPTION	DRAWN	DATE
XXX	XXX	XXX	SL	XXX

DO NOT SCALE DRAWING

REQUESTED XXX	DATE XXX	TITLE: 800mm EQUATOR CHANNEL SHOWER WASTE KIT
DRAWN S.L.	DATE XXX	
APPROVED	DATE	APPLICABLE STANDARD(S):
MATERIAL XXX		DRAWING REF NUMBER TKV800E
A3	UNITS = MM	SCALE (UOS) 1 :5 — SHEET 1 OF 10

TOOL NUMBER	0.0
PART WEIGHT(GRAMS)	0.0
FILE	S/CAD FILES/2017/DIVERSE/TKV

DISCLAIMER : THE DESIGN SUGGESTION IS PROVIDED FOR EVALUATION PURPOSES ONLY.

IT IS NOT TO BE CONSIDERED A FULL DESIGN AS WE ARE NOT THE CONSULTING ENGINEERS; WE ARE MANUFACTURERS. WE ARE NOT PRIVY TO ALL THE INFORMATION PERTAINING TO THIS MATTER AND WE HAVE NO CONTROL OVER THE PROJECT INSTALLATION OF THE PRODUCT. THE DESIGN SUGGESTION IS PROVIDED WITHOUT OBLIGATION. DESIGN IS TO BE CONFIRMED AND APPROVED BY THE ARCHITECT, HYDRAULICS ENGINEER, OR PROJECT MANAGER. ACCURATE MEASUREMENTS SHOULD BE CONFIRMED BY THE PERSON APPROVING THE DESIGN. ALLPROOF ACCEPTS NO LIABILITY FOR THE IMPROPER USE OF THE DESIGN SUGGESTION.